Data sheet

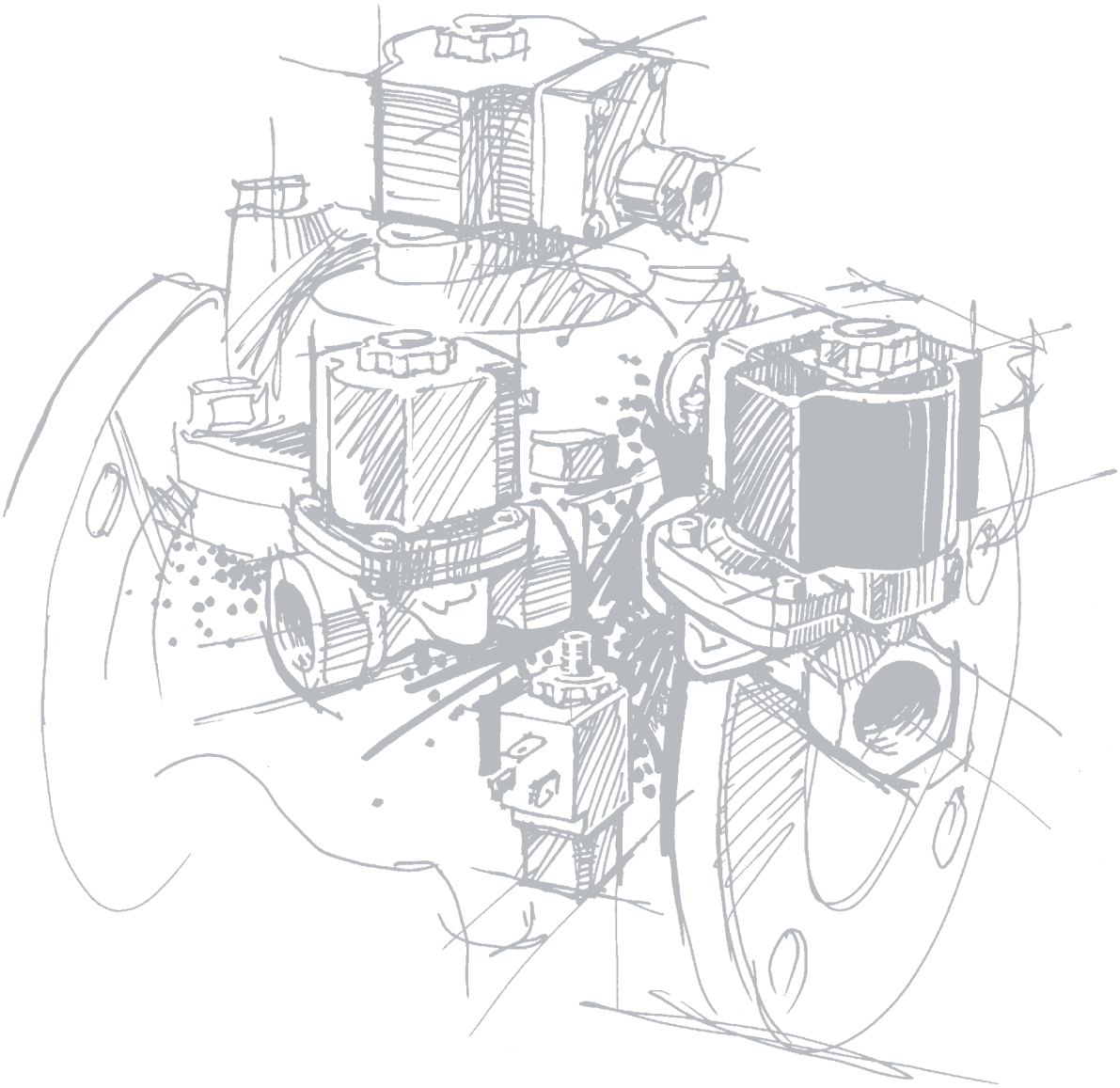

Solenoid valves
2/2-way direct-operated
Type EV210B

February 2002

DKACV.PD.200.A5.02
520B1504

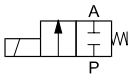

De-energized
closed

Type EV210B NC
for neutral liquids and gases
DN 1.5 - 25 B

G $^1/_8$ - G1

Features

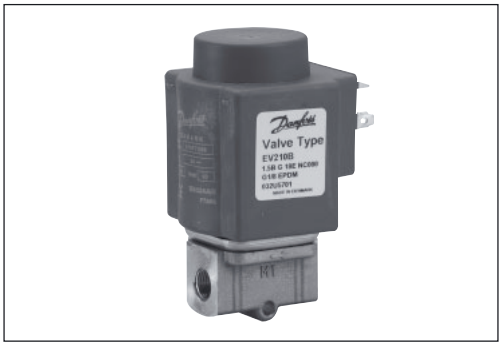

- For robust industrial application, such as control and dosage
- For water, oil, compressed air and similar neutral media
- Kv-value up to 8.0 m^3/h
- Differential pressure: Up to 30 bar
- Viscosity: Up to 50 cSt
- Ambient temperature: Up to +80°C
- Coil enclosure: Up to IP 67
- Thread connections: From G $^1/_8$ to G 1
- Also available with NPT thread. Please contact Danfoss
- The valves can be used for rough vacuum

Technical data

Type	EV210B	EV210B	EV210B	EV210B	EV210B	EV210B	EV210B
	1.5-2 B	3-4.5 B	6 B	8-10 B	15 B	20 B	25 B
Installation	Optional, but vertical solenoid system is recommended (see PT.600.A)						
Pressure range	0 - 30 bar						
Max. test pressure	50 bar	50 bar	50 bar	50 bar	12 bar	12 bar	12 bar
Tightness	Internally: Better than 8.3 x 10-2 mbar 1/sec (5 ccm air per min) Externally: Better than 1 x 10-3 mbar 1/sec (100% He)						
Time to open	10 ms	20 ms	20 ms	20 ms	30 ms	40 ms	40 ms
Time to close	20 ms	20 ms	20 ms	30 ms	50 ms	50 ms	70 ms
Ambient temperature	Max. +80°C (depending on coil type, see data for the coil selected)						
Medium temperature	See specific valve data						
Viscosity	max. 50 cSt						
Materials	Valve body:			Brass W.no. 2.0402			
	Armature:			Stainless steel:W.no. 1.4105/AISI 430FR			
	Armature tube:			Stainless steel W.no. 1.4306/AISI 304L			
	Armature stop:			Stainless steel W.no. 1.4105/AISI 430FR			
	Springs:			Stainless steel W.no. 1.4310/AISI 301			
	Seal material:			See specific valve data			

[1]) The times are indicative and apply to water.
The exact times will depend on the pressure conditions.

Coil options

Type: BD	Type: BA	Type: BB	Type: BE (IP67)	Type: BG
15 W ac	9 W ac 15 W dc	10 W ac 18 W dc	10 W ac 18 W dc	12 W ac 20 W dc

Danfoss also offers hum-free coils for noise sensitive applications and EEx m II T4 coils for use in explosion risk areas

See DKACV.PD.600.A

Dimensions and weight

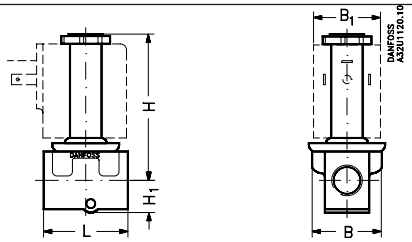

Type	L [mm]	B [mm]	B_1 [mm] Coil type BA/BD	B_1 [mm] Coil type BB/BE	B_1 [mm] Coil type BG	H_1 [mm]	H [mm]	Weight without coil [kg]
EV210B 1.5/2B	35.0	34.0	32	46	66	12.0	70.0	0.15
EV210B 3/4.5B	38.0	34.0	32	46	66	13.0	71.0	0.20
EV210B 6B	45.5	43.5	32	46	66	13.0	74.0	0.22
EV210B 8/10B	49.0	48.0	32	46	66	13.0	77.0	0.29
EV210B 15B	58.0	53.0	32	46	66	15.0	80.0	0.45
EV210B 20B	90.0	58.0	32	46	66	23.0	100.0	1.10
EV210B 25B	90.0	58.0	32	46	66	23.0	100.0	1.10

ã Danfoss A/S 02-2003

G $^1/_8$ - G1

Type EV210B NC
for neutral liquids and gases
DN 1.5 - 25 B

De-energized
closed

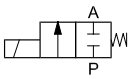

Function

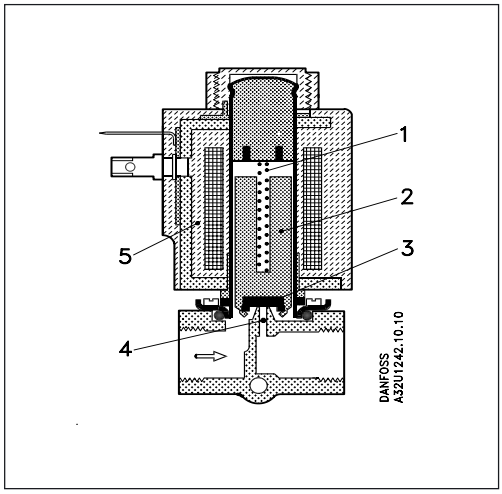

1. Closing spring
2. Armature
3. Valve plate
4. Valve orifice
5. Coil

Coil voltage disconnected (closed):
When the voltage is disconnected, the armature (2) with the valve plate (3) is pressed down against the valve orifice (4) by the closing spring (1) and the medium's pressure. The valve will be closed for as long as the voltage to the coil is disconnected.

Coil voltage connected (open):
When voltage is applied to the coil (5), the armature (2) with the valve plate (3) is lifted clear of the valve orifice (4).
The valve is now open for unimpeded flow and will be open for as long as there is voltage to the coil.

© Danfoss A/S 02-2003

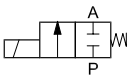

De-energized closed

Type EV210B NC
for neutral liquids and gases
DN 1.5 - 25 B

G 1/8 - G1

EV210B NC versions for AC and DC: Brass bodies

Conn:	Seal material **	Kv	DN	Media temp Min.	Media temp Max.	Type designation Main type	Type designation Specification	Code no. without coil	Permissible differential pressure (Bar) / Coil type*** BA 9W a.c.	BA 15W d.c.	BD 15W a.c.	BB 10W a.c.	BB 18W d.c.	BG 12W a.c.	BG 20W d.c.
		m³/h	mm	°C	°C										
G 1/8	EPDM*	0.08	1.5	- 30	+ 120	EV210B 1.5 B	G 18 E NC000	032U5701	30.0	30.0	30.0	30.0	30.0	30.0	30.0
	FKM	0.08	1.5	- 10	+ 100	EV210B 1.5 B	G 18 F NC000	032U5702	30.0	30.0	30.0	30.0	30.0	30.0	30.0
G 1/8	EPDM*	0.15	2.0	- 30	+ 120	EV210B 2.0 B	G 18 E NC000	032U5714	30.0	20.0	30.0	30.0	30.0	30.0	30.0
	FKM	0.15	2.0	- 10	+ 100	EV210B 2.0 B	G 18 F NC000	032U5704	30.0	20.0	30.0	30.0	30.0	30.0	30.0
G 1/8	EPDM*	0.30	3.0	- 30	+ 120	EV210B 3.0 B	G 18 E NC000	032U5705	15.0	9.0	24.0	20.0	13.0	30.0	25.0
	FKM	0.30	3.0	- 10	+ 100	EV210B 3.0 B	G 18 F NC000	032U5706	15.0	9.0	24.0	20.0	13.0	30.0	25.0
G 1/4	EPDM*	0.15	2.0	- 30	+ 120	EV210B 2.0 B	G 14 E NC000	032U5707	30.0	20.0	30.0	30.0	30.0	30.0	30.0
	FKM	0.15	2.0	- 10	+ 100	EV210B 2.0 B	G 14 F NC000	032U5708	30.0	20.0	30.0	30.0	30.0	30.0	30.0
G 1/4	EPDM*	0.30	3.0	- 30	+ 120	EV210B 3.0 B	G 14 E NC000	032U5709	15.0	9.0	24.0	20.0	13.0	30.0	25.0
	FKM	0.30	3.0	- 10	+ 100	EV210B 3.0 B	G 14 F NC000	032U5710	15.0	9.0	24.0	20.0	13.0	30.0	25.0
G 1/4	EPDM*	0.55	4.5	- 30	+ 120	EV210B 4.5 B	G 14 E NC000	032U3600	8.0	3.5	12.0	10.0	4.5	13.0	9.0
	FKM	0.55	4.5	- 10	+ 100	EV210B 4.5 B	G 14 F NC000	032U3601	8.0	3.5	12.0	10.0	4.5	13.0	9.0
G 1/4	EPDM*	0.70	6.0	- 30	+ 120	EV210B 6.0 B	G 14 E NC000	032U3602	2.5	1.0	3.3	4.0	2.0	6	4.5
	FKM	0.70	6.0	- 10	+ 100	EV210B 6.0 B	G 14 F NC000	032U3603	2.5	1.0	3.3	4.0	2.0	6	4.5
G 3/8	EPDM*	0.55	4.5	- 30	+ 120	EV210B 4.5 B	G 38 E NC000	032U3605	8.0	3.5	12.0	10.0	4.5	13.0	9.0
	FKM	0.55	4.5	- 10	+ 100	EV210B 4.5 B	G 38 F NC000	032U3606	8.0	3.5	12.0	10.0	4.5	13.0	9.0
G 3/8	EPDM	0.70	6.0	- 30	+ 120	EV210B 6.0 B	G 38 E NC000	032U3607	2.5	1.0	3.3	4.0	2.0	6	4.5
	FKM	0.70	6.0	- 10	+ 100	EV210B 6.0 B	G 38 F NC000	032U3608	2.5	1.0	3.3	4.0	2.0	6	4.5
G 3/8	EPDM	1.00	8.0	- 30	+ 120	EV210B 8.0 B	G 38 E NC000	032U3609	1.5	0.5	2.0	2.0	1.2	3	2.5
	FKM	1.00	8.0	- 10	+ 100	EV210B 8.0 B	G 38 F NC000	032U3610	1.5	0.5	2.0	2.0	1.2	3	2.5
G 3/8	EPDM	1.50	10.0	- 30	+ 120	EV210B 10 B	G 38 E NC000	032U3611	0.8	0.3	1.1	1.2	0.6	1.6	1.3
	FKM	1.50	10.0	- 10	+ 100	EV210B 10 B	G 38 F NC000	032U3612	0.8	0.3	1.1	1.2	0.6	1.6	1.3
G 3/8	EPDM	2.50	15.0	- 30	+ 120	EV210B 15 BD	G 38 E NC000	032U3613	0.25	-	0.4	0.3	0.15	0.45	0.4
	FKM	2.50	15.0	- 10	+ 100	EV210B 15 BD	G 38 F NC000	032U3614	0.25	-	0.4	0.3	0.15	0.45	0.4
G 1/2	EPDM	1.00	8.0	- 30	+ 120	EV210B 8.0 B	G 12 E NC000	032U3615	1.5	0.5	2.0	2.0	1.2	3	2.5
	FKM	1.00	8.0	- 10	+ 100	EV210B 8.0 B	G 12 F NC000	032U3616	1.5	0.5	2.0	2.0	1.2	3	2.5
G 1/2	EPDM	1.50	10.0	- 30	+ 120	EV210B 10 B	G 12 E NC000	032U3617	0.8	0.3	1.1	1.2	0.6	1.6	1.3
	FKM	1.50	10.0	- 10	+ 100	EV210B 10 B	G 12 F NC000	032U3618	0.8	0.3	1.1	1.2	0.6	1.6	1.3
G 1/2	EPDM	2.85	15.0	- 30	+ 120	EV210B 15 BD	G 12 E NC000	032U3619	0.25	-	0.4	0. 30	0.15	0.45	0.4
	FKM	2.85	15.0	- 10	+ 100	EV210B 15 BD	G 12 F NC000	032U3620	0.25	-	0.4	0.30	0.15	0.45	0.4
G 3/4	EPDM	4.5	20	- 30	+ 120	EV210B 20 BD	G 34 E NC000	032U3621	-	-	-	0.28	0.12	0.4	0.35
	FKM	4.5	20	- 10	+ 100	EV210B 20 BD	G 34 F NC000	032U3622	-	-	-	0.28	0.12	0.4	0.35
G1	EPDM	8.0	25	- 30	+ 120	EV210B 25 BD	G 1 E NC000	032U3623	-	-	-	0.25	0.09	0.35	0.2
	FKM	8.0	25	- 10	+ 100	EV210B 25 BD	G 1 F NC000	032U3624	-	-	-	0.25	0.09	0.35	0.2

* 140°C / 3.6 bar low pressure steam, orifice DIN 1.5 - 4.5

** NBR available as option
- 2/2 Flange version as option
- Low pressure steam: DN 1.5-3: Use coil type BB or BG
  DN 4.5: Use coil type BG
- EPDM versions up to DN 3.0 are WRAS approved

*** Pressure range can be extended to use in rough vacuum, typically up to 99% vacuum (10 mbar), depending on the application

Ordering - coils

See separate data sheet for coils DKACV.PD.600.A

ã Danfoss A/S 02-2003

G $^1/_8$ - G$^1/_4$

Type EV210B NO
for neutral liquids and gases
DN 1.5 - 4.5 B

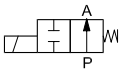

De-energized
open

Features

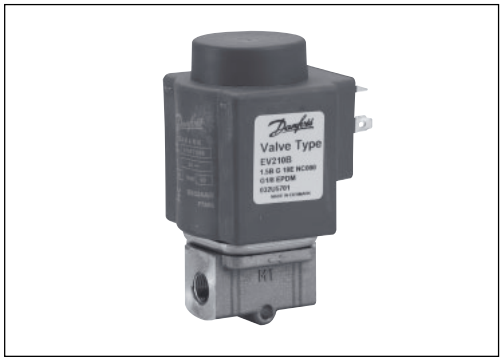

- For robust industrial application, such as control and dosage
- For water, oil, compressed air and similar neutral media
- K_v values up to 0.55 m³/h
- Differential pressure: Up to 30 bar
- Viscosity: Up to 50 cSt
- Ambient temperature: Up to +80°C
- Coil enclosure: Up to IP 67
- Thread connections: G $^1/_8$ and G $^1/_4$
- Also available with NPT thread. Please contact Danfoss.
- The valves can be used for rough vacuum

Technical data

Installation	Optional, but vertical solenoid system is recommended (see PT.600.A)	
Pressure range	0 to 30 bar	
Max. test pressure	50 bar	
Tightness	Internally:	Better than 8.3 x 10-2 mbar 1/sec (5 ccm air per
min)	Externally:	Better than 1 x 10-3 mbar 1/sec (100% He)
Time to open	10-30 ms	
Time to close 1)	20 ms	
Ambient temperature	max. +80°C (depending on coil type, see data for the coil selected)	
Medium temperature	See specific valve data	
Viscosity	Max. 50 cSt	
Materials	Valve body:	Brass, W.no. 2.0402
	Armature:	Stainless steel, W.no.1.4105/AISI 430FR
	Armature tube:	Stainless steel, W.no.1.4306/AISI 304L
	Armature stop:	Stainless steel, W.no.1.4105/AISI 430FR
	Springs:	Stainless steel, W.no.1.4310/AISI 301
	Seal material:	See specific valve data

[1]) The times are indicative and apply to water. The exact times will depend on the pressure conditions.

Coil options

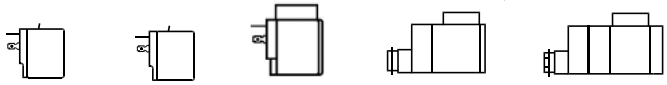

Type: BD 15W ac | Type: BA 9 W ac 15 W dc | Type: BB 10 W ac 18 W dc | Type: BE (IP67) 10 W ac 18 W dc | Type: BG 12 W ac 20 W dc

Danfoss also offers hum-free coils for noise sensative applications and EEx m II T4 coils for use in explosion risk areas - please see coil data sheet DKACV.PD.600.A

Dimensions and weight

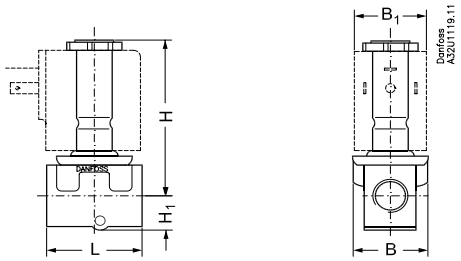

Type	L [mm]	B [mm]	B_1 [mm] Coil type BA/BD	B_1 [mm] Coil type BB/BE	B_1 [mm] Coil type BG	H_1 [mm]	H [mm]	Weight without coil [kg]
EV210B 1.5/2 B NO	35.0	34.0	32	46	66	12.0	70.0	0.15
EV210B 3/4.5 B NO	38.0	34.0	32	46	66	13.0	71.0	0.2

© Danfoss A/S 02-2003

G 1/8 - G1/4

Type EV210B NO
for neutral liquids and gases
DN 1.5 - 4.5 B

De-energized
open

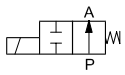

Function

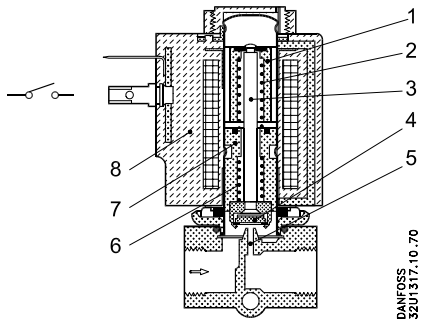

1. Armature
2. Opening spring
3. Spindle
4. Valve plate
5. Valve orifice
6. Closing spring
7. Fixed base
8. Coil

Coil voltage disconnected (open):
When the voltage to the coil (8) is disconnected, the valve orifice (5) is open, the opening spring (2) lifting the spindle (3) with the valve plate (4) clear of the orifice. The valve will be open for as long as the supply voltage to the coil is disconnected.

Coil voltage connected (closed):
When voltage is applied to the coil, the magnetic field draws the valve's armature (1) down to touch the fixed base (7). The spindle (3) with the valve plate (4) is now pressed down against the valve orifice (5) by the closing spring (6). The valve will be closed for as long as there is voltage to the coil.

EV210B NO versions for AC and DC current
Brass bodies

Conn:	Seal mat. **	Kv	DN	Media temp		Type designation		Code no. without coil	Permissible differential pressure (Bar)/Coil type ***						
				Min.	Max.	Main type	Specification		BA		BD	BB		BG	
									9W a.c.	15W d.c.	15W a.c.	10W a.c.	18W d.c.	12W a.c.	20W d.c.
		m³/h	mm	°C	°C										
G1/8	EPDM	0.08	1,5	- 30	+ 120	EV210B 1,5 B	G 18 E NO000	032U3630	30	30	30	30	30	30	30
	FKM	0.08	1,5	- 10	+ 100	EV210B 1,5 B	G 18 F NO000	032U3631	30	30	30	30	30	30	30
G1/8	EPDM	0.15	2,0	- 30	+ 120	EV210B 2,0 B	G 18 E NO000	032U3632	12	12	12	12	12	12	12
	FKM	0.15	2,0	- 10	+ 100	EV210B 2,0 B	G 18 F NO000	032U3633	12	12	12	12	12	12	12
G1/8	EPDM	0.30	3,0	- 30	+ 120	EV210B 3,0 B	G 18 E NO000	032U3634	5	5	5	5	5	5	5
	FKM	0.30	3,0	- 10	+ 100	EV210B 3,0 B	G 18 F NO000	032U3635	5	5	5	5	5	5	5
G1/4	EPDM	0.15	2,0	- 30	+ 120	EV210B 2,0 B	G 14 E NO000	032U3636	12	12	12	12	12	12	12
	FKM	0.15	2,0	- 10	+ 100	EV210B 2,0 B	G 14 F NO000	032U3637	12	12	12	12	12	12	12
G1/4	EPDM	0.30	3,0	- 30	+ 120	EV210B 3,0 B	G 14 E NO000	032U3638	5	5	5	5	5	5	5
	FKM	0.30	3,0	- 10	+ 100	EV210B 3,0 B	G 14 F NO000	032U3639	5	5	5	5	5	5	5
G1/4	EPDM	0.55	4,5	- 30	+ 120	EV210B 4,5 B	G 14 E NO000	032U3640	2	2	2	2	2	2	2
	FKM	0.55	4,5	- 10	+ 100	EV210B 4,5 B	G 14 F NO000	032U3641	2	2	2	2	2	2	2

** NBR available as option
***Pressure range can be extended to use in rough vacuum,
typically up to 99% vacuum (10 mbar), depending on the application

Ordering - coils

See separate data sheet for coils DKACV.PD.600.A

ã Danfoss A/S 02-2003

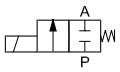

De-energized
closed

Type EV210B NC
for aggressive liquids and gases
DN 1.5 - 4.5 SS

G $^1/_8$ - G $^1/_4$

Features

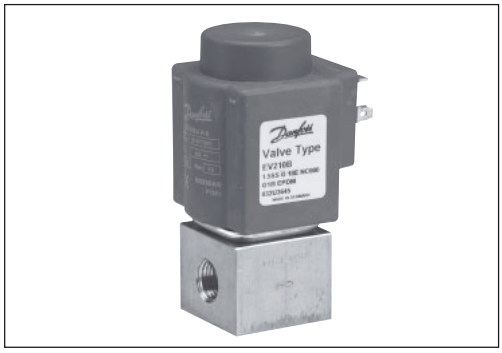

- For robust industrial application, such as control and dosage
- For neutral and aggressive liquids and gases. Contact Danfoss if you are in doubt about the valve's suitability for the medium in question.
- Kv: Up to 0.55 m³/h
- Differential pressure: Up to 30 bar
- Viscosity: Up to 50 cSt
- Ambient temperature: Up to +80°C
- Coil enclosure: Up to IP 67
- Thread connections: From G $^1/_8$ to G $^1/_4$
- The valves can be used for rough vacuum

Technical data

Installation	Optional, but vertical solenoid system is recommended (see PT.600.A)	
Pressure range	0 - 30 bar	
Max. test pressure	50 bar	
Tightness	Internally: Better than 8.3 x 10-2 mbar 1/sec (5 ccm air per min) Externally: Better than 1 x 10-3 mbar 1/sec (100% He)	
Time to open [1])	10 ms - 30 ms	
Time to close [1])	20 ms	
Ambient temperature	max. +80°C (depending on coil type, see data for the coil selected)	
Medium temperature	See specific valve data	
Viscosity	max. 50 cSt	
Materials	Valve body:	Stainless steel, W.no. 1.4404/AISI 316L
	Armature:	Stainless steel, W.no. 1.4105/AISI 430FR
	Armature tube:	Stainless steel, W.no. 1.4306/AISI 304L
	Armature stop:	Stainless steel, W.no. 1.4105/AISI 430FR
	Springs:	Stainless steel, W.no. 1.4310/AISI 301
	Seal material:	See specific valve data

[1]) The times are indicative and apply to water. The exact times will depend on the pressure conditions.

Coil options

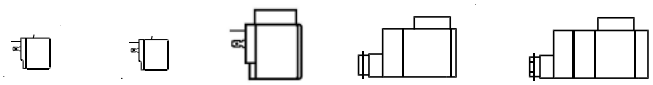

Type: BD
15W ac

Type: BA
9 W ac
15 W dc

Type: BB
10 W ac
18 W dc

Type: BE (IP67)
10 W ac
18 W dc

Type: BG
12 W ac
20 W dc

Danfoss also offers hum-free coils for noise sensitive applications and EEx m II T4 coils for use in explosion risk areas - please see coil data sheet DKACV.PD.600.A

Dimensions and weight

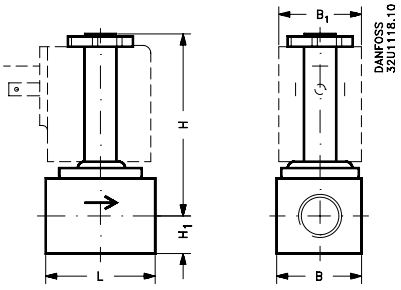

Type	L [mm]	B [mm]	B_1 [mm] Coil type BA/BD	B_1 [mm] Coil type BB/BE	B_1 [mm] Coil type BG	H_1 [mm]	H [mm]	Weight without coil [kg]
EV210B 1.5/2 SS	35.0	34.0	32	46	66	12.0	70.0	0.15
EV210B 3/4.5 SS	35.0	34.0	32	46	66	13.0	71.0	0.2

© Danfoss A/S 02-2003

G $^1/_8$ - G $^1/_4$

Type EV210B NC
for aggressive liquids and gases
DN 1.5 - 4.5 SS

De-energized
closed

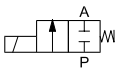

Function

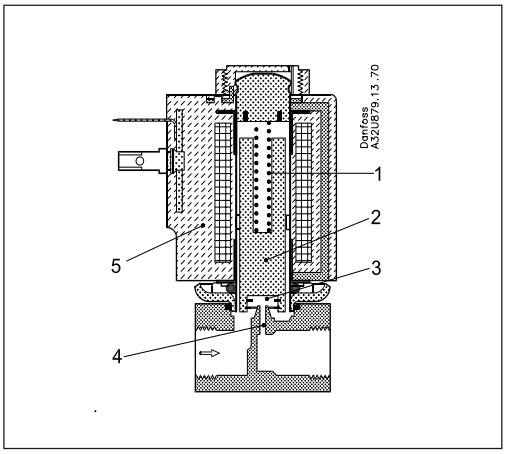

1. Closing spring
2. Armature
3. Valve plate
4. Valve orifice
5. Coil

Coil voltage disconnected (closed):
When the voltage is disconnected, the armature (2) with the valve plate (3) is pressed down against the valve orifice (4) by the closing spring (1) and the medium's pressure.
The valve will be closed for as long as the voltage to the coil is disconnected.

Coil voltage connected (open):
When voltage is applied to the coil (5), the armature (2) with the valve plate (3) is lifted clear of the valve orifice (4).
The valve is now open for unimpeded flow and will be open for as long as there is voltage to the coil.

EV210B NC versions for AC and DC current

Stainless steel bodies

Conn.	Seal mat. **	Kv	DN	Media temp		Type designation		Code no.	Permissible differential pressure (Bar)/Coil type ***						
				Min.	Max.	Main type	Specification	without coil	BA		BD	BB		BG	
		m³/h	mm	°C	°C				9W a.c.	15W d.c.	15W a.c.	10W a.c.	18W d.c.	12W a.c.	20W d.c.
G1/8	EPDM*	0.08	1.5	- 30	+ 120	EV210B 1,5 SS	G 18 E NC000	032U3645	30.0	30.0	30.0	30.0	30.0	30.0	30.0
	FKM	0.08	1.5	-10	+ 100	EV210B 1,5 SS	G 18 F NC000	032U3646	30.0	30.0	30.0	30.0	30.0	30.0	30.0
G1/8	EPDM*	0.15	2.0	- 30	+ 120	EV210B 2,0 SS	G 18 E NC000	032U3647	30.0	20.0	30.0	30.0	30.0	30.0	30.0
	FKM	0.15	2.0	-10	+ 100	EV210B 2,0 SS	G 18 F NC000	032U3648	30.0	20.0	30.0	30.0	30.0	30.0	30.0
G1/8	EPDM*	0.30	3.0	- 30	+ 120	EV210B 3,0 SS	G 18 E NC000	032U3649	15.0	9.0	24.0	20.0	13.0	30.0	25.0
	FKM	0.30	3.0	-10	+ 100	EV210B 3,0 SS	G 18 F NC000	032U3650	15.0	9.0	24.0	20.0	13.0	30.0	25.0
G1/4	EPDM*	0.15	2.0	- 30	+ 120	EV210B 2,0 SS	G 14 E NC000	032U3651	30.0	20.0	30.0	30.0	30.0	30.0	30.0
	FKM	0.15	2.0	-10	+ 100	EV210B 2,0 SS	G 14 F NC000	032U3652	30.0	20.0	30.0	30.0	30.0	30.0	30.0
G1/4	EPDM*	0.30	3.0	- 30	+ 120	EV210B 3,0 SS	G 14 E NC000	032U3653	15.0	9.0	24.0	20.0	13.0	30.0	25.0
	FKM	0.30	3.0	-10	+ 100	EV210B 3,0 SS	G 14 F NC000	032U3654	15.0	9.0	24.0	20.0	13.0	30.0	25.0
G1/4	EPDM*	0.55	4.5	- 30	+ 120	EV210B 4,5 SS	G 14 E NC000	032U3655	8.0	3.5	12.0	10.0	4.5	13.0	9.0
	FKM	0.55	4.5	-10	+ 100	EV210B 4,5 SS	G 14 F NC000	032U3656	8.0	3.5	12.0	10.0	4.5	13.0	9.0

* 140°C / 3,6 bar low pressure steam

-Low pressure steam: DN 1.5-3: Use coil type BB og BG
DN 4.5: Use coil type BG

-EPDM versions are WRAS approved

*** Pressure range can be extended to use in rough vacuum, typically up to 99% vacuum (10 mbar), depending on the application

Ordering - coils

See separate data sheet for coils DKACV.PD.600.A

ã Danfoss A/S 02-2003

Mounting fittings, NC/NO

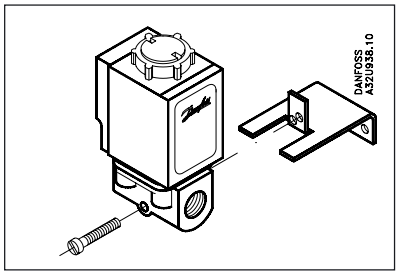

For EV210B 1.5 B - 4.5 B in connection with synthetic tubes, pipes and similar.

Description	Code no.
Brackets	**032U1040**

Optional
Isolating diaphragm kit

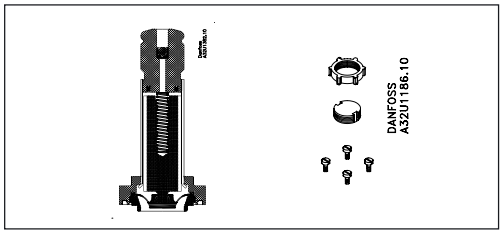

The kit consists of assembled isolating unit, O-ring, 4 screws, locking button and nut for the coil. Suitable for orifice sizes up to DN 3 mm.

Seal material	Code no.
EPDM	**042U1009**
FKM	**042U1010**

Power kit for EV210B

The power kit enables the EV210B valve to handle higher differential pressure. The kit can be used on valves up to G½ connection and with a DN of max 10 mm.
Please contact Danfoss for further specifications.

Seal material	Code no.*
EPDM	**032U5275**
FKM	**032U5276**

*Only for use on NC versions

Spare parts kit, NC

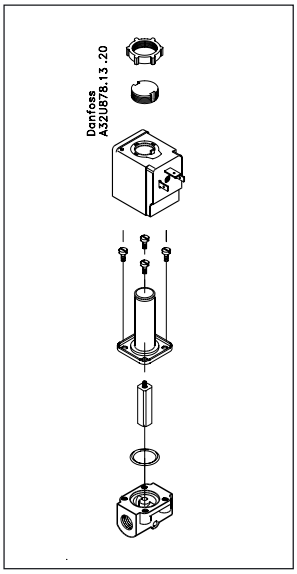

The spare parts kit comprises a locking button, nut for the coil, armature with valve plate and spring, and an O-ring.

FKM	EPDM	Function
EV210B 1.5/2/3/4.5		
032U2003	032U6000	NC
EV210B 6/8/10		
032U2011	032U2006	NC
EV210B 15		
032U2012	032U2013	NC
EV210B 20		
032U2014	032U2017	NC
EV210B 25		
032U2018	032U2019	NC

Spare part kit, NO

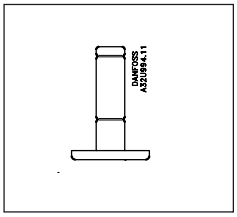

FKM	EPDM	Function
EV210B 1.5/2/3/4.5		
032U2004	032U2005	NO

ã Danfoss A/S 02-2003

Danfoss can accept no responsibility for possible errors in catalogues, brochures and other printed material. Danfoss reserves the right to alter its products without notice. This also applies to products already on order provided that such alterations can be made without subsequential changes being necessary in specifications already agreed.
All trademarks in this material are property of the respective companies. Danfoss and the Danfoss logotype are trademarks of Danfoss A/S. All rights reserved.

ã Danfoss A/S 02-2003