Data sheet

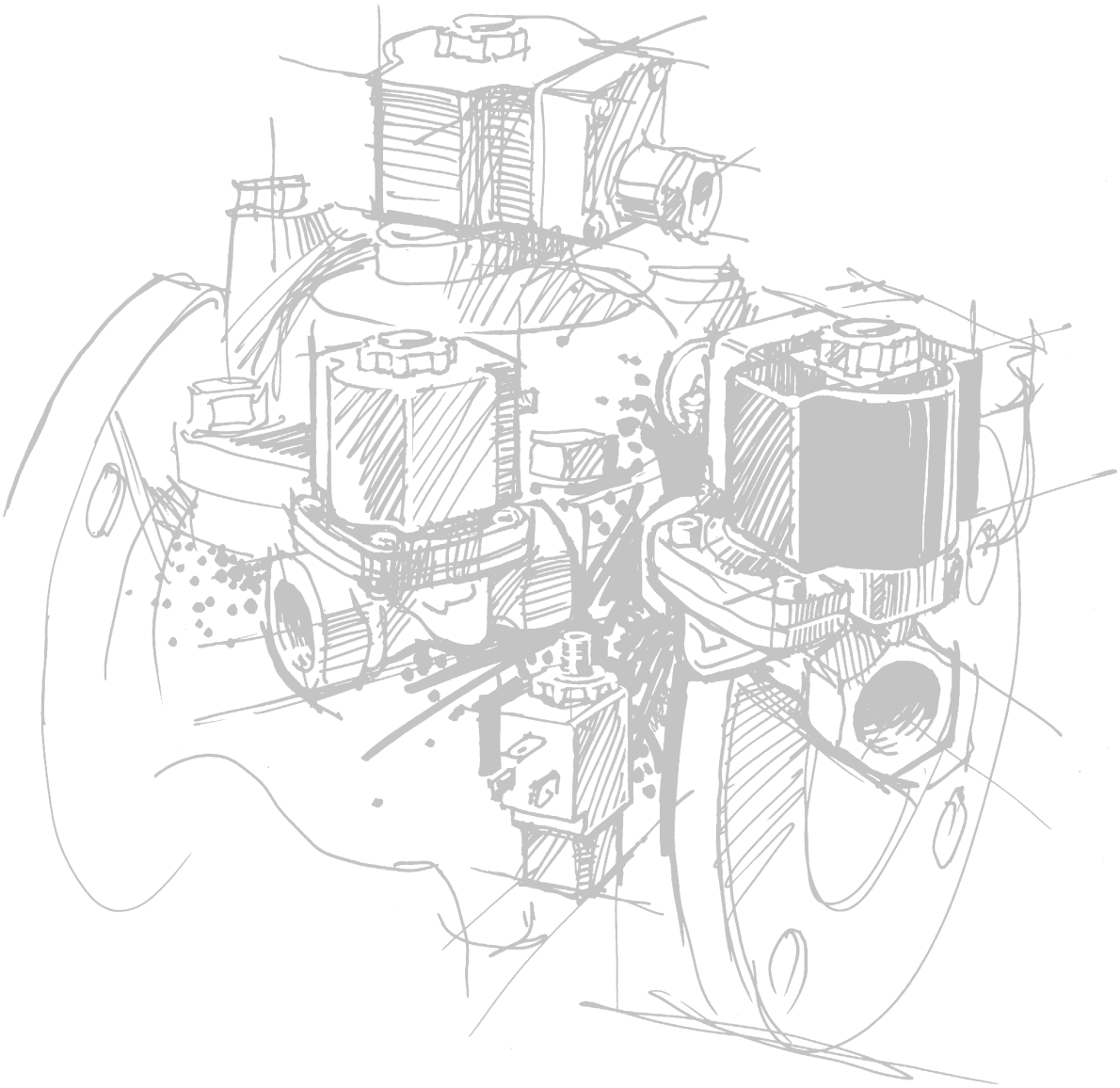

Solenoid valves
2/2-way assisted lift operated
Type EV250B

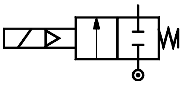

De-energized closed

Type EV250B
for neutral liquids and gases
DN 12 - 22 B

G $^1/_2$ - G 1

Features

- For heating systems and other closed systems with low and strongly fluctuating pressure conditions
- For water, oil, compressed air and similar neutral media
- Flow range for water: Up to 12 m³/h
- Differential pressure: Up to 10 bar
- Viscosity: Up to 50 cSt
- Ambient temperature: Up to +80°C
- Media temperature from –30 to +120°C
- Coil enclosure: Up to IP 67
- Thread connections: From G $^1/_2$ to G 1
- Also available with NPT thread. Please contact Danfoss.

Technical data

Main type	EV 250B 12B	EV 250B 18B	EV 250B 22B
Installation	Vertical solenoid system is recommended (see DKACV.PT.600.A)		
Pressure range with coil	type: BB/BE 0 - 10 bar (10W ac) type: BG 0 - 10 bar (20W dc)		
Max. test pressure	20 bar		
Time to open[1])	100 ms	150 ms	150 ms
Time to close[1])	100 ms	100 ms	100 ms
Ambient temperature	Max. +80°C		
Medium temperature	EPDM: –30 - +120°C [2]) FKM: 0 - +100°C (+60°C for water)		
Viscosity	max. 50 cSt		
Materials	Valve body: Brass, W.no. 2.0402 Armature: Stainless steel,W.no. 1.4105/AISI 430 FR Armature tube: Stainless steel, W.no. 1.4306/AISI 304 L Armature stop: Stainless steel, W.no. 1.4105/AISI 430 FR Springs: Stainless steel, W.no. 1.4310/AISI 310 O-rings: EPDM or FKM Valve plate: EPDM or FKM Diaphragm: EPDM or FKM		

[1]) The times are indicative and apply to water. The exact times will depend on the pressure conditions.
[2]) Low pressure steam 140°C/4 bar, contact Danfoss.

Coil options

Type BB
10 W ac / 18 W dc

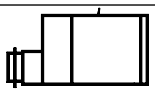

Type BE
10 W ac / 18 W dc

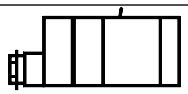

Type BG
20 W dc

Danfoss also offers hum-free coils for noise sensative applications and EEx m II T4 coils for use in explosion risk areas - please see coil data sheet DKACV.PD.600.A

See DKACV.PD.600.A

Dimensions and weight

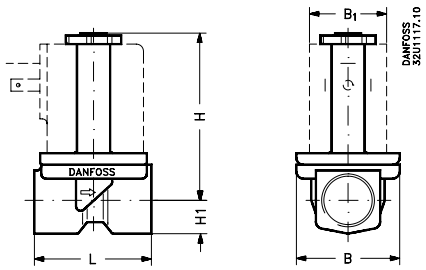

Type	L [mm]	B [mm]	B_1 [mm] Coil type BB/BE	B_1 [mm] Coil type BG/BN	H_1 [mm]	H [mm]	Weight without coil [kg]
G $^1/_2$	58.0	50.0	46	68	13.0	77.0	0.35
G $^3/_4$	90.0	56.0	46	68	18.0	83.0	0.65
G 1	90.0	64.0	46	68	23.0	92.0	0.95

© Danfoss A/S 08-2000

G $^1/_2$ - G 1

Type EV250B
for neutral liquids and gases
DN 12 - 22 B

De-energized
closed

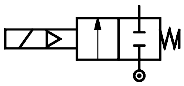

Function

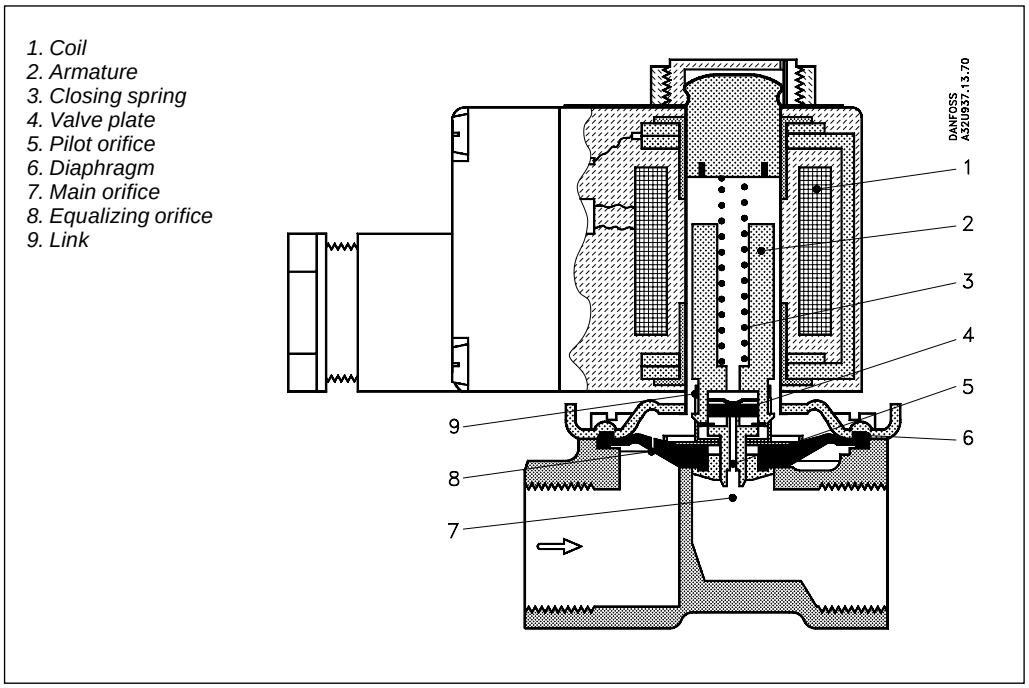

Coil voltage disconnected (closed):
When the supply voltage to the coil (1) is disconnected, the valve plate (4) is pressed down against the pilot orifice (5) by the closing spring (3). The pressure across the diaphragm (6) is built up via the equalizing orifice (8). The diaphragm closes the main orifice (7) as soon as the pressure across the diaphragm is equivalent to the inlet pressure below due to the larger diameter of the upper side and/or the tension of the closing spring (3). The valve will be closed for as long as the voltage to the coil is disconnected.

Coil voltage connected (open):
When voltage is applied to the coil, the armature (2) and the valve plate (4) are lifted clear of the pilot orifice (5). If there is a differential pressure across the valve, the pressure across the diaphragm (6) drops as the pilot orifice is larger than the equalizing orifice. Therefore the diaphragm is lifted clear of the main orifice (7). If there is no differential pressure across the valve, the armature (2) draws the diaphragm (6) clear of the main orifice (7) using the links (9). The valve will be open for as long as there is voltage to the coil.

Ordering - valve body

Connection ISO 228/1	Seal material	k_v-value [m³/h]	Media temp. [1]) Min. [°C]	Media temp. [1]) Max. [°C]	Type designation: Main type	Type designation: Specification	Code no. without coil: Standard	Code no. without coil: WRc	Permissible diff. pressure (bar)/Coil type: Min.	Max. BB / BE 10 W ac	Max. BB / BE 18 W dc	Max. BG 20 W dc
G $^1/_2$	EPDM [2])	2.5	–30	+120 [4])	EV250B 12 B	G 12E NC000	**032U1271**	**032U5781**	0	10	6	10
	FKM [3])		0	+100 [5])	EV250B 12 B	G 12F NC000	**032U1273**			10	6	10
G $^3/_4$	EPDM [2])	5	–30	+120 [4])	EV250B 18 B	G 34E NC000	**032U1276**	**032U5786**	0	10	6	10
	FKM [3])		0	+100 [5])	EV250B 18 B	G 34F NC000	**032U1278**			10	6	10
G 1	EPDM [2])	5	–30	+120 [4])	EV250B 22 B	G 1E NC000	**032U1280**	**032U5790**	0	10	6	10
	FKM [3])		0	+100 [5])	EV250B 22 B	G 1F NC000	**032U1283**			10	6	10

[1]) 18 W dc coil: Max. +90°C
[2]) EPDM is suitable for water and steam (steam max. +140°C/4 bar)
[3]) FKM is suitable for oil and air; water max. +60° C
[4]) +140°C/4 bar (low pressure steam) - contact Danfoss
[5]) For water, Max. +60°C

Ordering - coils

See separate data sheet for coils DKACV.PD.600.A

© Danfoss A/S 08-2000

Type EV250B
for neutral liquids and gases
DN 12 - 22 B

Spare parts kit for EV250B

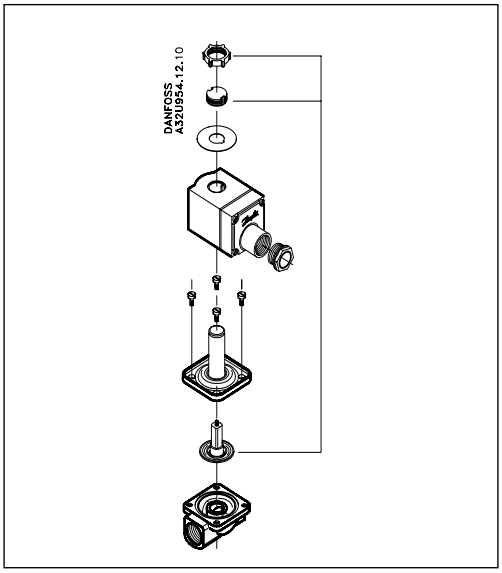

The spare parts kit comprises a locking button and nut for the coil, and a service element consisting of an armature with valve plate and spring fitted on the diaphragm.

For type	Seal material	**Code no.**
EV250B 12B	EPDM [1])	**032U0288**
EV250B 12B	FKM [2])	**032U0088**
EV250B 18B-22B	EPDM [1])	**032U0289**
EV250B 18B-22B	FKM [2])	**032U0089**

[1]) EPDM is suitable for water and steam (steam max. +140°C/4 bar).
[2]) FKM is suitable for oil and air. For water at max. +60 °C.

Danfoss can accept no responsibility for possible errors in catalogues, brochures and other printed material. Danfoss reserves the right to alter its products without notice. This also applies to products already on order provided that such alterations can be made without subsequential changes being necessary in specifications already agreed.
All trademarks in this material are property of the respective companies. Danfoss and the Danfoss logotype are trademarks of Danfoss A/S. All rights reserved.

DK-6000 Kolding
Denmark